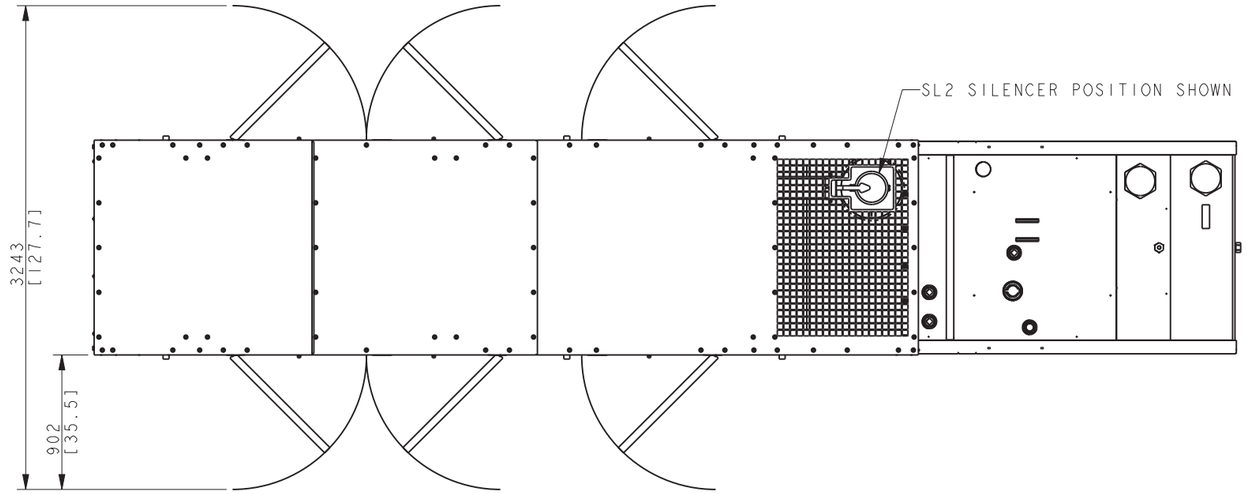

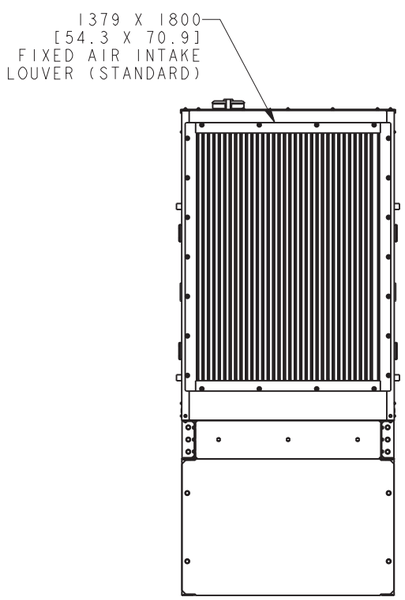

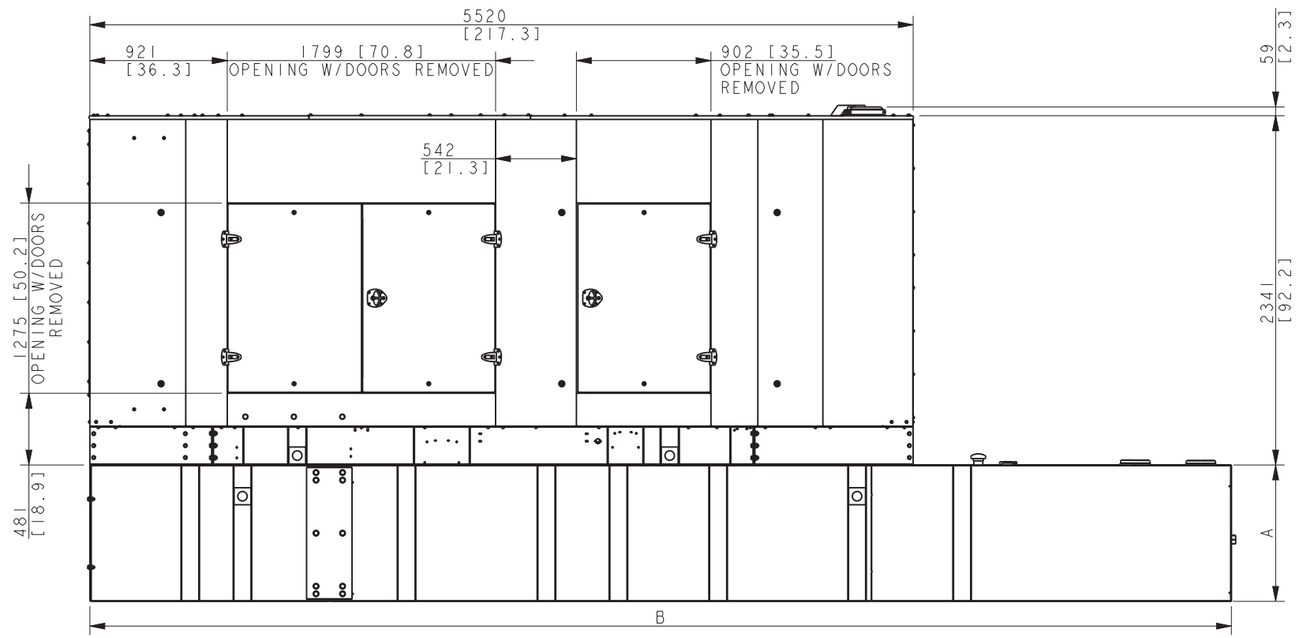

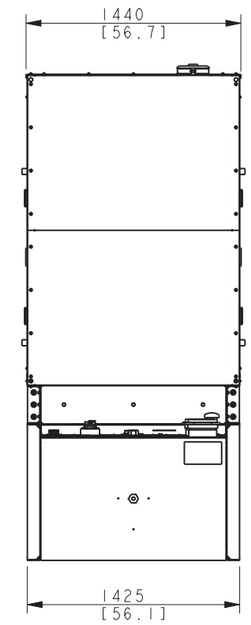

TANK INFORMATION

LITERS [GALLONS] MIN HOURS	GENSETS	DIM A MM [INCH]	DIM B MM [INCH]	TANK WEIGHT KG [LBS] (NO FUEL)
1530 [404] 12 HOURS	350-400KW	406.4 [16.0]	5760.8[226.8]	1110 [2446]
1771 [468] 12 HOURS	500KW	457.2 [18.0]	5760.8[226.8]	1158 [2554]
2930 [774] 24 HOURS	350-400KW	762.0 [30.0]	5760.8[226.8]	1401 [3089]
3384 [894] 24 HOURS	500KW	838.2 [33.0]	5760.8[226.8]	1484 [3271]
4394 [1161] 36 HOURS	350-400KW	914.4 [36.0]	6459.8[254.3]	1789 [3945]
5047 [1333] 36 HOURS	500KW	914.4 [36.0]	7094.8[279.3]	1986 [4379]
1530 [404] 12 HOURS STATE	350-400KW	381.0 [15.0]	6713.8[264.3]	1299 [2864]
1771 [468] 12 HOURS STATE	500KW	431.8 [17.0]	6713.8[264.3]	1333 [2939]
2930 [774] 24 HOURS STATE	350-400KW	660.4 [26.0]	6713.8[264.3]	1547 [3411]
3384 [894] 24 HOURS STATE	500KW	736.6 [29.0]	6713.8[264.3]	1630 [3594]
4394 [1161] 36 HOURS STATE	350-400KW	914.4 [36.0]	6891.6[271.3]	1847 [4072]
5047 [1333] 36 HOURS STATE	500KW	914.4 [36.0]	7653.6[301.3]	2094 [4616]

350-500 REOZJC/D	KG [LBS]
STEEL SOUND L2 ENCLOSURE WEIGHT	1000 [2205] APPROX
ALUM. SOUND L2 ENCLOSURE WEIGHT	590 [1300] APPROX
STEEL SOUND L1 ENCLOSURE WEIGHT	870 [1920] APPROX
ALUM. SOUND L1 ENCLOSURE WEIGHT	460 [1015] APPROX
STEEL WEATHER ENCLOSURE WEIGHT	850 [1875] APPROX

350-500KW REOZJC/D
STEEL & ALUMINUM ENCL.
12 - 36 HOUR TANKS

REV	DATE	ON COMPOSITE DWGS, SEE PART NO. FOR REVISION LEVEL	BY
-	25NOV2019	NEW DRAWING [CT200393]	YBY

DO NOT SCALE. REFERENCE THE MODEL FOR ALL UNSPECIFIED DIMENSIONS

UNLESS OTHERWISE SPECIFIED:
ALL DIMENSIONS IN MILLIMETERS
GENERAL TOLERANCES:
X.XX ± 0.25
X.X ± 1.0
X ± 1.5
ANGLES ± 0°30'
SURFACE FINISH MAX.

THIRD ANGLE PROJECTION

APPROVALS		DATE
DRAWN	YBY	25NOV2019
CHECKED	KJB	25NOV2019
APPROVED	DMS	25NOV2019

KOHLER.
KOHLER, WISCONSIN 53044

THIS DRAWING IN DESIGN AND DETAIL IS KOHLER CO. PROPERTY AND MUST NOT BE USED EXCEPT IN CONNECTION WITH KOHLER CO. WORK. ALL RIGHTS OF DESIGN OR INVENTION ARE RESERVED.

TITLE
DIMENSION PRINT,
350-500REOZJC/D ENCL & TANKS

SCALE 0.05 | CAD NO. | SHEET 1 of 7
DWG NO. **ADV-9189** | **D**

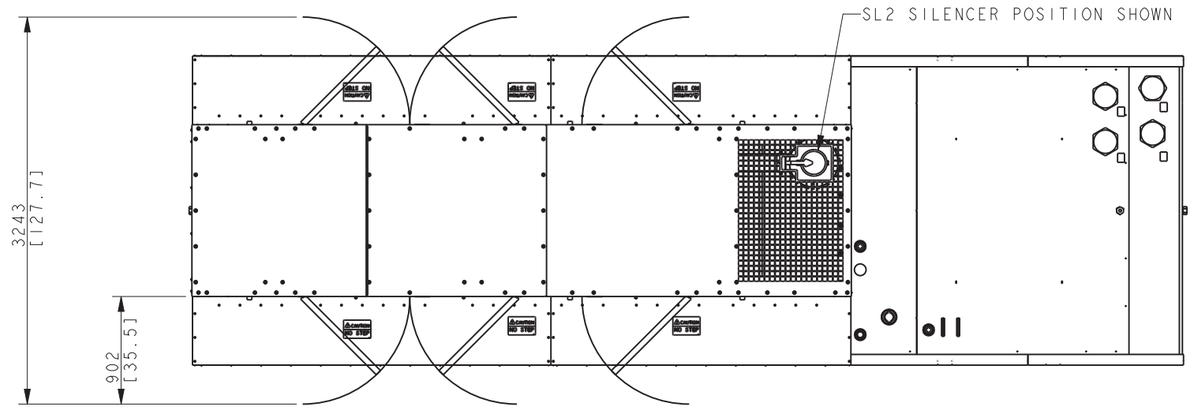

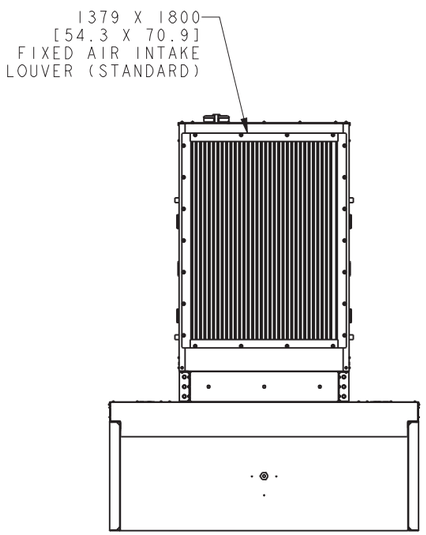

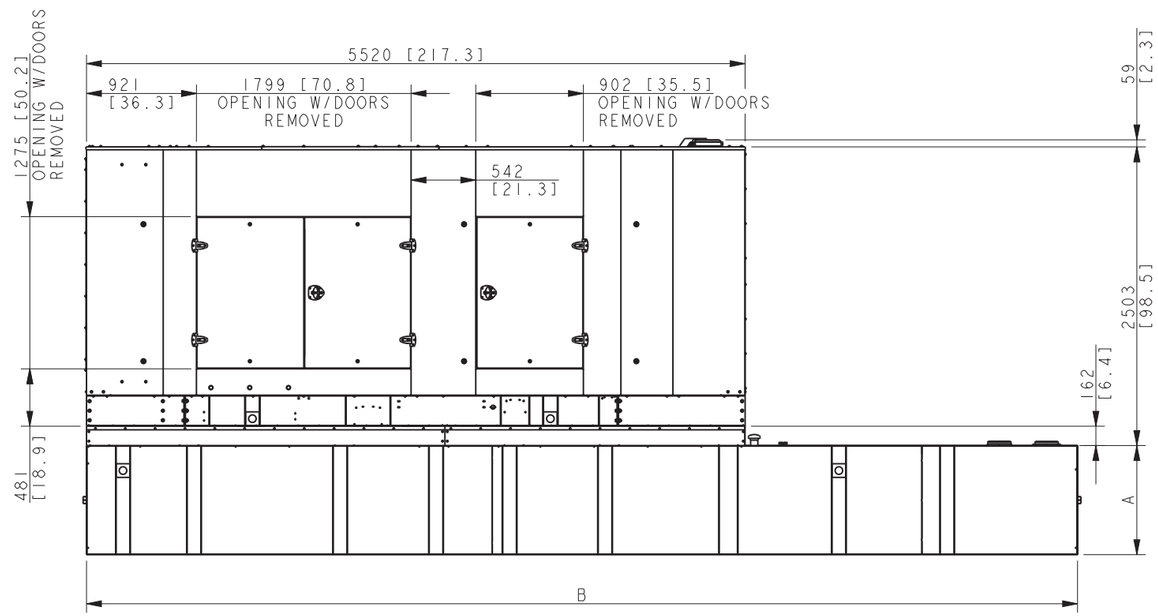

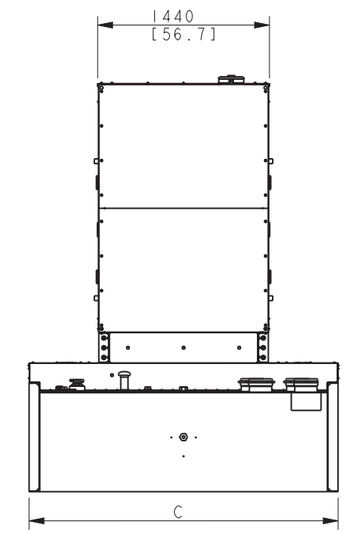

TANK INFORMATION

LITERS [GALLONS] MIN HOURS	GENSETS	DIM A MM [INCH]	DIM B MM [INCH]	DIM C MM [INCH]	TANK WEIGHT KG [LBS] (NO FUEL)
5042 [1332] 48 HOURS	350KW	711.2 [28.0]	5850.1 [230.3]	1981.2 [78.0]	2751 [6064]
5818 [1537] 48 HOURS	400KW	812.8 [32.0]	5850.1 [230.3]		2887 [6364]
6651 [1757] 48 HOURS	500KW	914.4 [36.0]	5850.1 [230.3]		3029 [6678]
5061 [1337] 48 HOURS STATE	350KW	635.0 [25.0]	6282 [247.3]		2910 [6416]
5852 [1546] 48 HOURS STATE	400KW	711.2 [28.0]	6282 [247.3]		3040 [6702]
6681 [1765] 48 HOURS STATE	500KW	812.8 [32.0]	6282 [247.3]		3184 [7020]
7510 [1984] 72 HOURS	350KW	762.0 [30.0]	5850.1 [230.3]	2590.8 [102.0]	3486 [7686]
8695 [2297] 72 HOURS	400KW	889.0 [35.0]	5850.1 [230.3]		3656 [8061]
9971 [2634] 72 HOURS	500KW	914.4 [36.0]	6028 [237.3]		4021 [8865]
7537 [1991] 72 HOURS STATE	350KW	660.4 [26.0]	6282 [247.3]		3729 [8222]
8748 [2311] 72 HOURS STATE	400KW	762.0 [30.0]	6282 [247.3]		3894 [8585]
9993 [2640] 72 HOURS STATE	500KW	863.6 [34.0]	6282 [247.3]		4063 [8958]
9993 [2640] 96 HOURS STATE	350KW		6282 [247.3]		4063 [8958]
11602 [3065] 96 HOURS STATE	400KW		7264.4 [286.0]		4426 [9758]
13325 [3520] 96 HOURS STATE	500KW		8305.8 [327.0]		4862 [10719]

350-500KW REOZJC/D
STEEL & ALUMINUM ENCL.
48 - 96 HOUR TANKS

350-500 REOZJC/D	KG [LBS]
STEEL SOUND L2 ENCLOSURE WEIGHT	1000 [2205] APPROX
ALUM. SOUND L2 ENCLOSURE WEIGHT	590 [1300] APPROX
STEEL SOUND L1 ENCLOSURE WEIGHT	870 [1920] APPROX
ALUM. SOUND L1 ENCLOSURE WEIGHT	460 [1015] APPROX
STEEL WEATHER ENCLOSURE WEIGHT	850 [1875] APPROX

REV	DATE	ON COMPOSITE DWGS, SEE PART NO. FOR REVISION LEVEL	BY
-	25NOV2019	NEW DRAWING [CT200393]	YBY

DO NOT SCALE. REFERENCE THE MODEL FOR ALL UNSPECIFIED DIMENSIONS

UNLESS OTHERWISE SPECIFIED:
ALL DIMENSIONS IN MILLIMETERS
GENERAL TOLERANCES:
X.XX ± 0.25
X.X ± 1.0
X ± 1.5
ANGLES ± 0°30'
SURFACE FINISH 125 MAX.

THIRD ANGLE PROJECTION

APPROVALS		DATE
DRAWN	YBY	25NOV2019
CHECKED	KJB	25NOV2019
APPROVED	DMS	25NOV2019

KOHLER.
KOHLER, WISCONSIN 53044

THIS DRAWING IN DESIGN AND DETAIL IS KOHLER CO. PROPERTY AND MUST NOT BE USED EXCEPT IN CONNECTION WITH KOHLER CO. WORK. ALL RIGHTS OF DESIGN OR INVENTION ARE RESERVED.

TITLE
DIMENSION PRINT,
350-500REOZJC/D ENCL & TANKS

SCALE 0.04 | CAD NO. | SHEET 2 of 7
DWG NO. **ADV-9189** | **D**

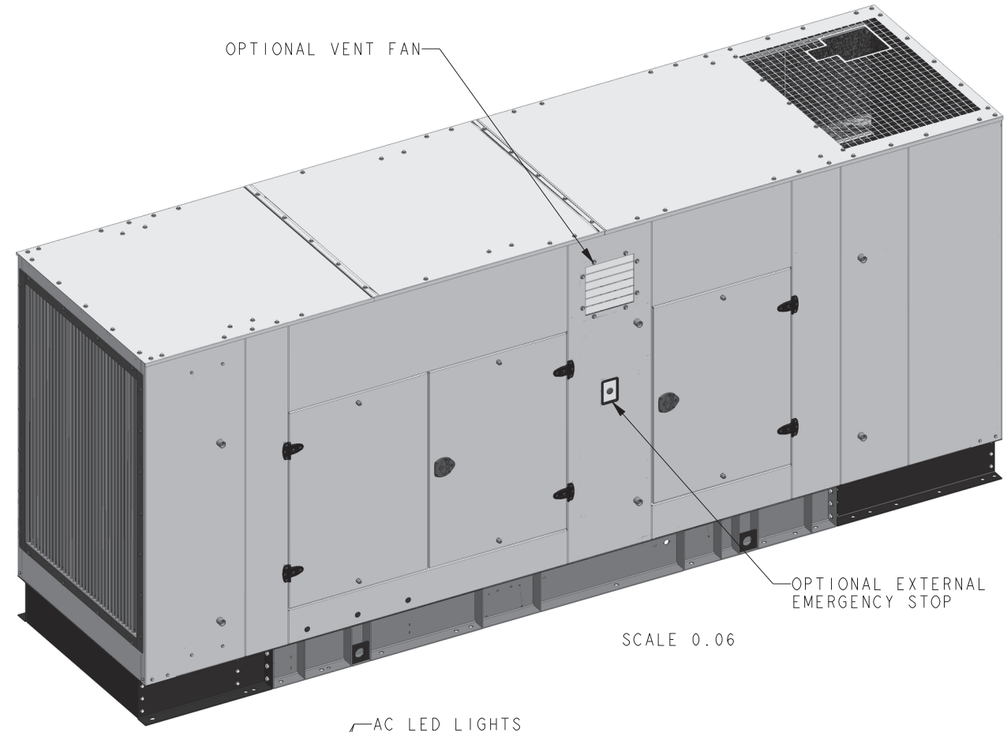

SCALE 0.06

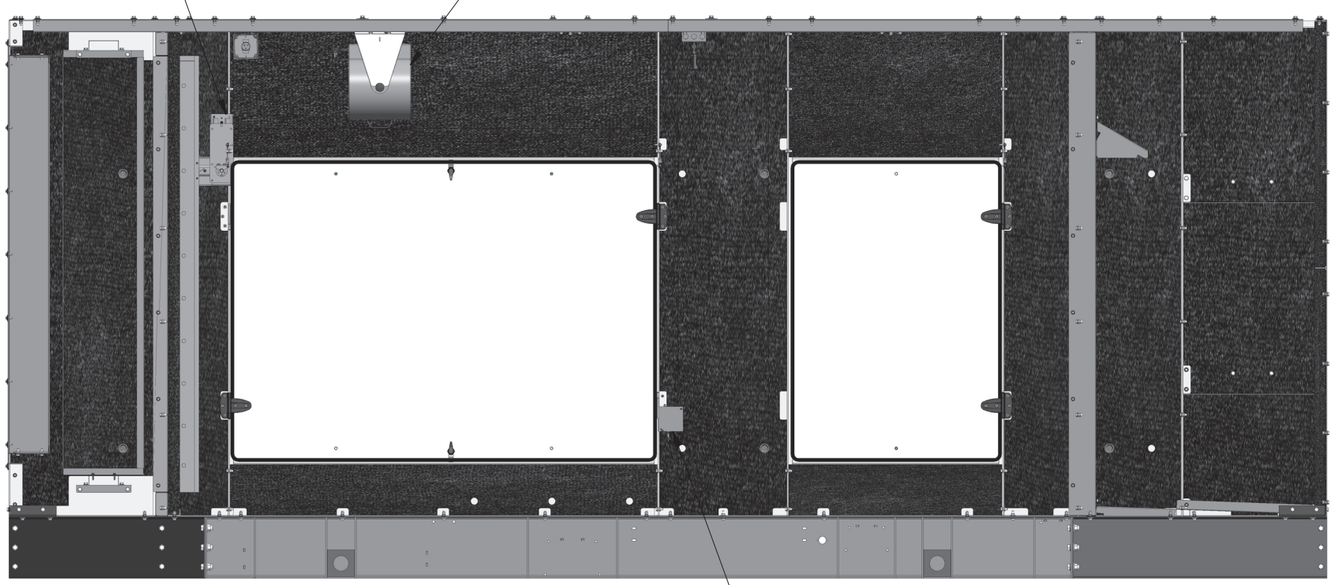

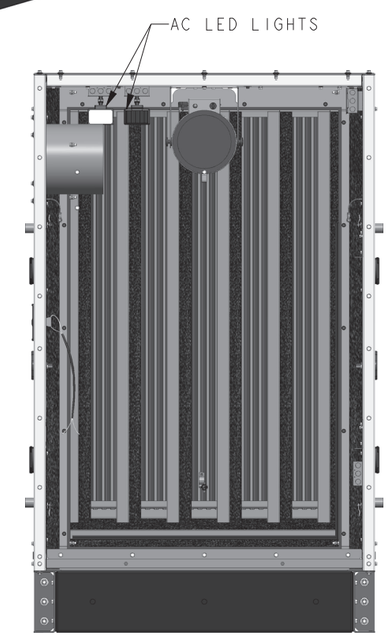

350-500KW REOZJC/D
ENCLOSURE OPTIONAL ACCESSORIES

REV	DATE	ON COMPOSITE DWGS, SEE PART NO. FOR REVISION LEVEL	BY
-	25NOV2019	NEW DRAWING [CT200393]	YBY

DO NOT SCALE. REFERENCE THE MODEL FOR ALL UNSPECIFIED DIMENSIONS

UNLESS OTHERWISE SPECIFIED:
ALL DIMENSIONS IN MILLIMETERS
GENERAL TOLERANCES:
X.XX ± 0.25
X.X ± 1.0
X ± 1.5
ANGLES ± 0°30'
SURFACE FINISH MAX.

THIRD ANGLE PROJECTION

APPROVALS		DATE
DRAWN	YBY	25NOV2019
CHECKED	KJB	25NOV2019
APPROVED	DMS	25NOV2019

KOHLER.
KOHLER, WISCONSIN 53044

THIS DRAWING IN DESIGN AND DETAIL IS KOHLER CO. PROPERTY AND MUST NOT BE USED EXCEPT IN CONNECTION WITH KOHLER CO. WORK. ALL RIGHTS OF DESIGN OR INVENTION ARE RESERVED.

TITLE
DIMENSION PRINT, 350-500REOZJC/D ENCL & TANKS

SCALE 0.08 | CAD NO. | SHEET 3 of 7
DWG NO. **ADV-9189** | **D**

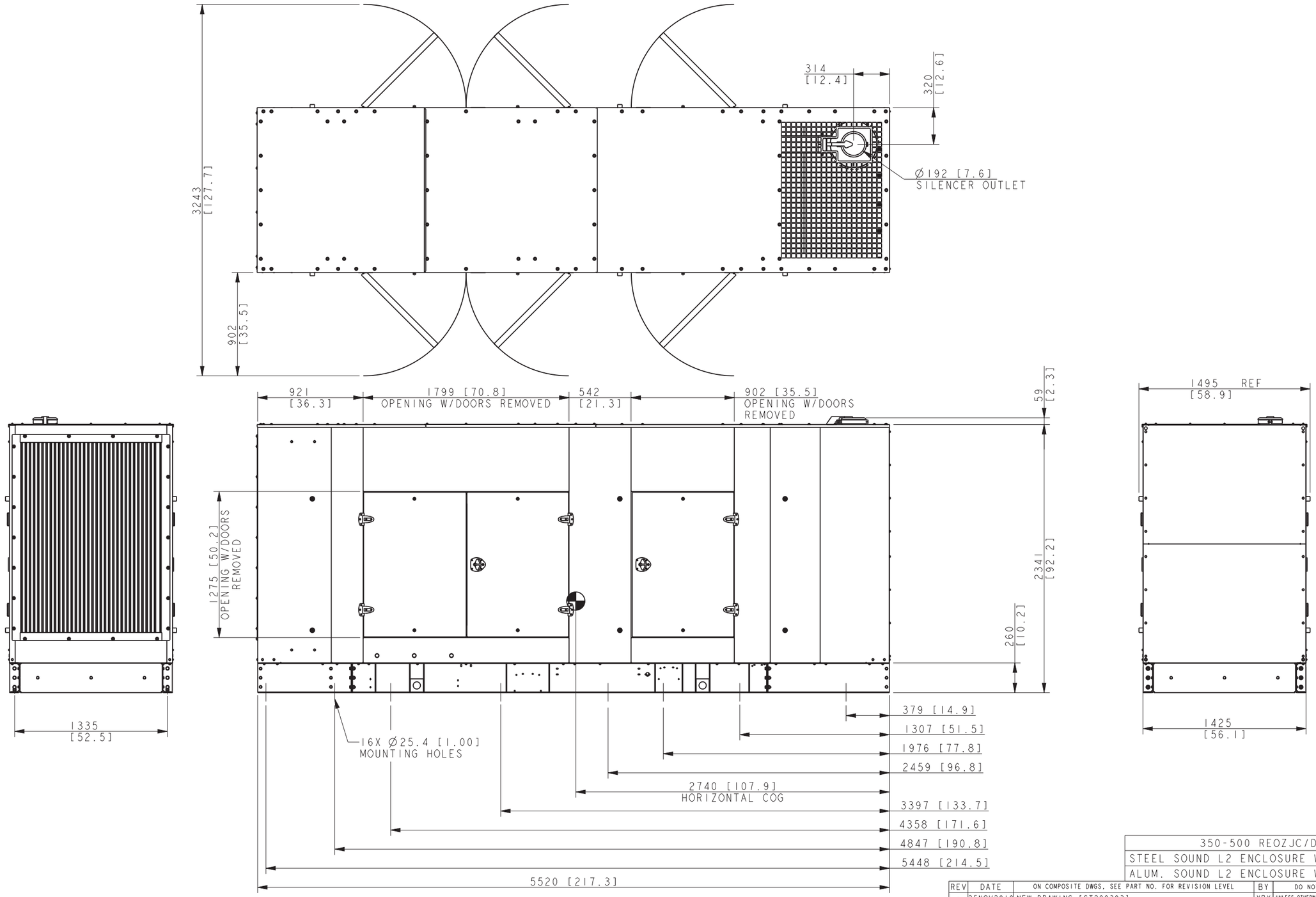

350-500 REOZJC/D	KG [LBS]
STEEL SOUND L2 ENCLOSURE WEIGHT	1000 [2205] APPROX
ALUM. SOUND L2 ENCLOSURE WEIGHT	590 [1300] APPROX

REV	DATE	ON COMPOSITE DWGS, SEE PART NO. FOR REVISION LEVEL	BY
-	25NOV2019	NEW DRAWING [CT200393]	YBY

DO NOT SCALE. REFERENCE THE MODEL FOR ALL UNSPECIFIED DIMENSIONS

UNLESS OTHERWISE SPECIFIED:
ALL DIMENSIONS IN MILLIMETERS
GENERAL TOLERANCES:
X.XX ± 0.25
X.X ± 1.0
X ± 1.5
ANGLES ± 0°30'
SURFACE FINISH MAX.

THIRD ANGLE PROJECTION

APPROVALS		DATE
DRAWN	YBY	25NOV2019
CHECKED	KJB	25NOV2019
APPROVED	DMS	25NOV2019

KOHLER.
KOHLER, WISCONSIN 53044

THIS DRAWING IN DESIGN AND DETAIL IS KOHLER CO. PROPERTY AND MUST NOT BE USED EXCEPT IN CONNECTION WITH KOHLER CO. WORK. ALL RIGHTS OF DESIGN OR INVENTION ARE RESERVED.

TITLE
DIMENSION PRINT, 350-500REOZJC/D ENCL & TANKS

SCALE 0.06 | CAD NO. | SHEET 4 of 7

DWG NO. **ADV-9189** | D

350-500KW REOZJC/D
STEEL & ALUMINUM SL2 ENCL.

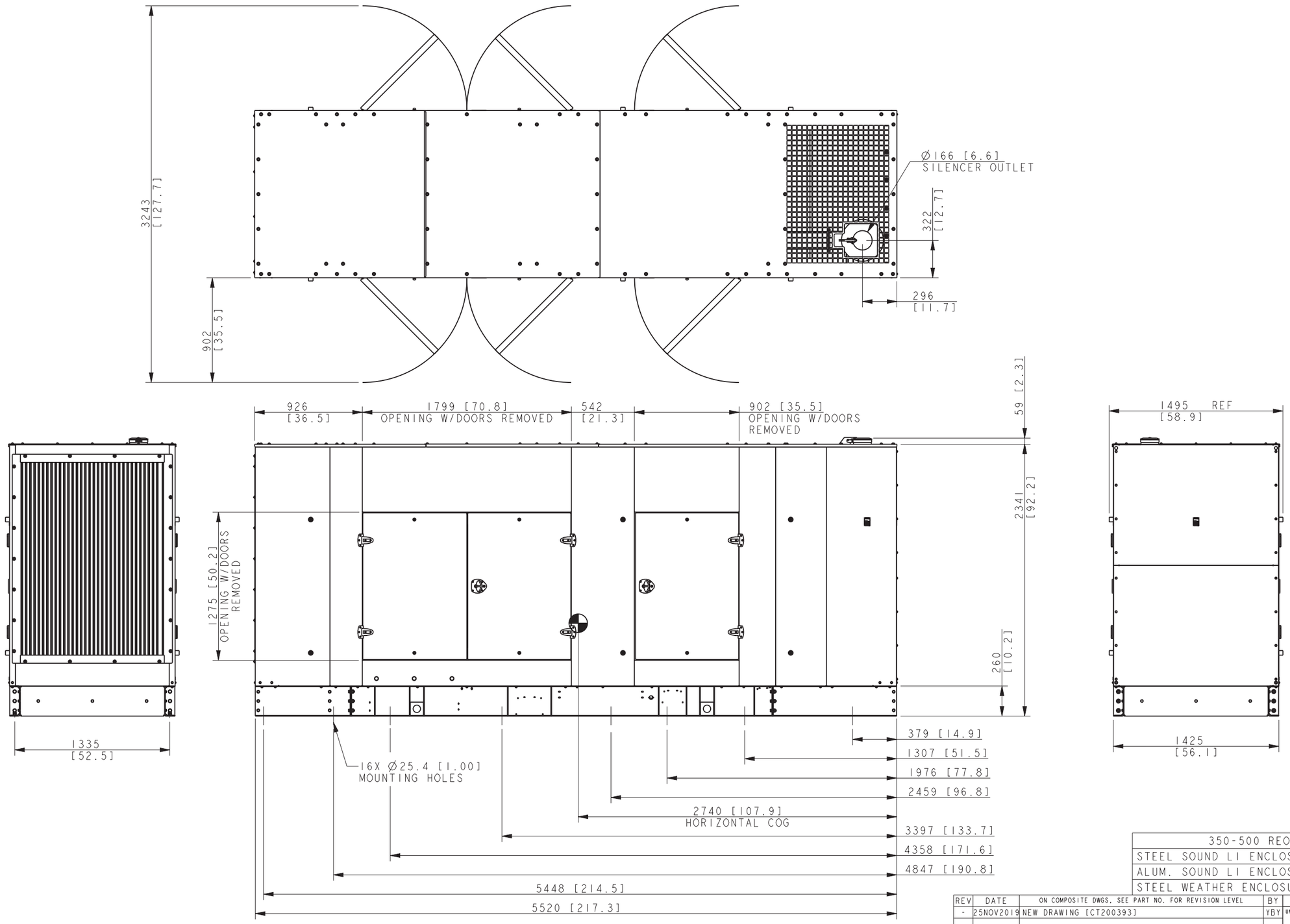

350-500 REOZJC/D	KG [LBS]
STEEL SOUND L1 ENCLOSURE WEIGHT	870 [1920] APPROX
ALUM. SOUND L1 ENCLOSURE WEIGHT	460 [1015] APPROX
STEEL WEATHER ENCLOSURE WEIGHT	850 [1875] APPROX

REV	DATE	ON COMPOSITE DWGS, SEE PART NO. FOR REVISION LEVEL	BY
-	25NOV2019	NEW DRAWING [CT200393]	YBY

DO NOT SCALE. REFERENCE THE MODEL FOR ALL UNSPECIFIED DIMENSIONS

UNLESS OTHERWISE SPECIFIED:
ALL DIMENSIONS IN MILLIMETERS
GENERAL TOLERANCES:
X.XX ± 0.25
X.X ± 1.0
X ± 1.5
ANGLES ± 0°30'
SURFACE FINISH MAX.

THIRD ANGLE PROJECTION

APPROVALS		DATE
DRAWN	YBY	25NOV2019
CHECKED	KJB	25NOV2019
APPROVED	DMS	25NOV2019

KOHLER.
KOHLER, WISCONSIN 53044

THIS DRAWING IN DESIGN AND DETAIL IS KOHLER CO. PROPERTY AND MUST NOT BE USED EXCEPT IN CONNECTION WITH KOHLER CO. WORK. ALL RIGHTS OF DESIGN OR INVENTION ARE RESERVED.

TITLE **DIMENSION PRINT, 350-500REOZJC/D ENCL & TANKS**

SCALE 0.06 | CAD NO. | SHEET 5 of 7

DWG NO. **ADV-9189** | **D**

350-500KW REOZJC/D
STEEL & ALUMINUM SL1 ENCL.
STEEL WEATHER ENCL.

TANK INFORMATION													
LITERS [GALLONS] MIN HOURS	GENSETS	DIM A MM [INCH]	DIM B MM [INCH]	M	N	P	Q	R	S	T	V	W	X
1530 [404] 12 HOURS	350-400KW	406.4 [16.0]	5760.8 [226.8]	66.3 [2.61]	606.8 [23.89]	488.5 [19.23]	961.7 [37.86]	937.9 [36.93]	482.6 [19.00]	668.6 [26.32]	931.5 [36.67]	931.5 [36.67]	523.9 [20.63]
1771 [468] 12 HOURS	500KW	457.2 [18.0]	5760.8 [226.8]										
2930 [774] 24 HOURS	350-400KW	762.0 [30.0]	5760.8 [226.8]										
3384 [894] 24 HOURS	500KW	838.2 [33.0]	5760.8 [226.8]										
4394 [1161] 36 HOURS	350-400KW	914.4 [36.0]	6459.8 [254.3]									574.6 [22.62]	648.3 [25.52]
5047 [1333] 36 HOURS	500KW	914.4 [36.0]	7094.8 [279.3]									577.0 [22.72]	576.6 [22.70]
1530 [404] 12 HOURS STATE	350-400KW	381.0 [15.0]	6713.8 [264.3]									664.2 [26.15]	812.7 [32.00]
1771 [468] 12 HOURS STATE	500KW	431.8 [17.0]	6713.8 [264.3]										
2930 [774] 24 HOURS STATE	350-400KW	660.4 [26.0]	6713.8 [264.3]									704.3 [27.73]	772.6 [30.42]
3384 [894] 24 HOURS STATE	500KW	736.6 [29.0]	6713.8 [264.3]										
4394 [1161] 36 HOURS STATE	350-400KW	914.4 [36.0]	6891.6 [271.3]										950.4 [37.42]
5047 [1333] 36 HOURS STATE	500KW	914.4 [36.0]	7653.6 [301.3]									891.3 [35.09]	821.1 [32.33]

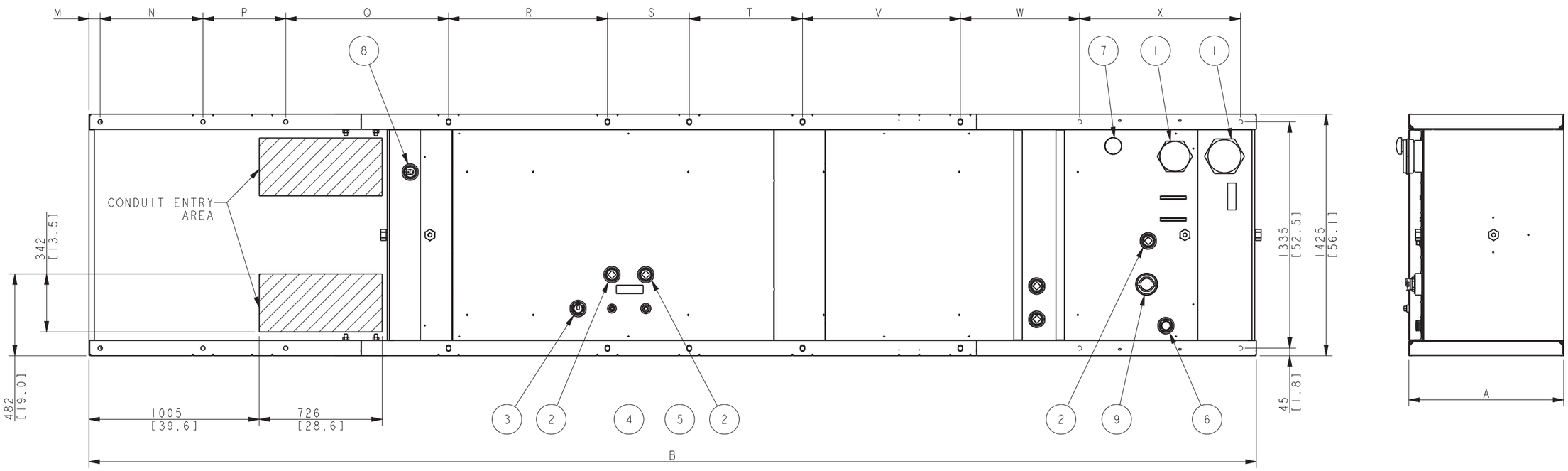

4396 [1161 GAL.] 36 HOUR STATE TANK SHOWN.

ITEM	DESCRIPTION
9	FILL CAP, 2" LOCKABLE W/PIPE RISER
8	SWITCH, FUEL IN BASIN TOP MTD, 2"
7	VENT, NORMAL
6	GAUGE, FUEL LEVEL, DIRECT READ
5	RETURN, FUEL (3/4" NPT)
4	SUPPLY, FUEL (1/2" NPT)
3	GAUGE, FUEL LEVEL, W/ SENDER
2	PLUG, PIPE (2" NPT)
1	CAP, EMERGENCY VENT

REV	DATE	ON COMPOSITE DWGS, SEE PART NO. FOR REVISION LEVEL	BY
-	25NOV2019	NEW DRAWING [CT200393]	YBY

DO NOT SCALE. REFERENCE THE MODEL FOR ALL UNSPECIFIED DIMENSIONS

UNLESS OTHERWISE SPECIFIED:
ALL DIMENSIONS IN MILLIMETERS
GENERAL TOLERANCES:
X.XX ± 0.25
X.X ± 1.0
X ± 1.5
ANGLES ± 0° 30'
SURFACE FINISH MAX.

THIRD ANGLE PROJECTION

APPROVALS		DATE
DRAWN	YBY	25NOV2019
CHECKED	KJB	25NOV2019
APPROVED	DMS	25NOV2019

KOHLER.
KOHLER, WISCONSIN 53044

THIS DRAWING IN DESIGN AND DETAIL IS KOHLER CO. PROPERTY AND MUST NOT BE USED EXCEPT IN CONNECTION WITH KOHLER CO. WORK. ALL RIGHTS OF DESIGN OR INVENTION ARE RESERVED.

TITLE
DIMENSION PRINT, 350-500REOZJC/D ENCL & TANKS

SCALE 0.08 | CAD NO. | SHEET 6 of 7
DWG NO. ADV-9189 | D

350-500KW REOZJC/D ENCLOSED
12 - 36 HOUR TANKS

TANK INFORMATION

LITERS [GALLONS] MIN HOURS	GENSETS	DIM A MM [INCH]	DIM B MM [INCH]	DIM C MM [INCH]	TANK WEIGHT KG [LBS] (NO FUEL)	M	N	P	Q	R	S	T	U	V	W	X	Y
5042 [1332] 48 HOURS	350KW	711.2 [28.0]	5850.1 [230.3]	1981.2 [78.0]	2751 [6064]	305.8 [12.0]	595.1 [23.4]	575.0 [22.6]	649.5 [25.6]	804.0 [31.7]	616.5 [24.3]	800.1 [31.5]	515.0 [20.3]	518.3 [20.4]	-	-	-
5818 [1537] 48 HOURS	400KW	812.8 [32.0]	5850.1 [230.3]		2887 [6364]												
6651 [1757] 48 HOURS	500KW	914.4 [36.0]	5850.1 [230.3]		3029 [6678]												
5061 [1337] 48 HOURS STATE	350KW	635.0 [25.0]	6282.0 [247.3]		2953 [6510]												
5852 [1546] 48 HOURS STATE	400KW	711.2 [28.0]	6282.0 [247.3]		3077 [6784]												
6681 [1765] 48 HOURS STATE	500KW	812.8 [32.0]	6282.0 [247.3]		3214 [7087]												
7510 [1984] 72 HOURS	350KW	762.0 [30.0]	5850.1 [230.3]	2590.8 [102.0]	3486 [7686]												
8695 [2297] 72 HOURS	400KW	889.0 [35.0]	5850.1 [230.3]		3656 [8061]												
9971 [2634] 72 HOURS	500KW	914.4 [36.0]	6028.0 [237.3]		3901 [8600]												
7537 [1991] 72 HOURS STATE	350KW	660.4 [26.0]	6282.0 [247.3]		3263 [7193]												
8748 [2311] 72 HOURS STATE	400KW	762.0 [30.0]	6282.0 [247.3]		3415 [7529]												
9993 [2640] 72 HOURS STATE	500KW	863.6 [34.0]	6282.0 [247.3]		4063 [8958]												
9993 [2640] 96 HOURS STATE	350KW		6282.0 [247.3]		4063 [8958]												
11602 [3065] 96 HOURS STATE	400KW		7264.4 [286.0]		4426 [9758]										926.5 [36.5]	465.0 [18.3]	442.2 [17.4]
13325 [3520] 96 HOURS STATE	500KW		8305.8 [327.0]		4863 [10720]											907.2 [35.7]	589.2 [23.2]

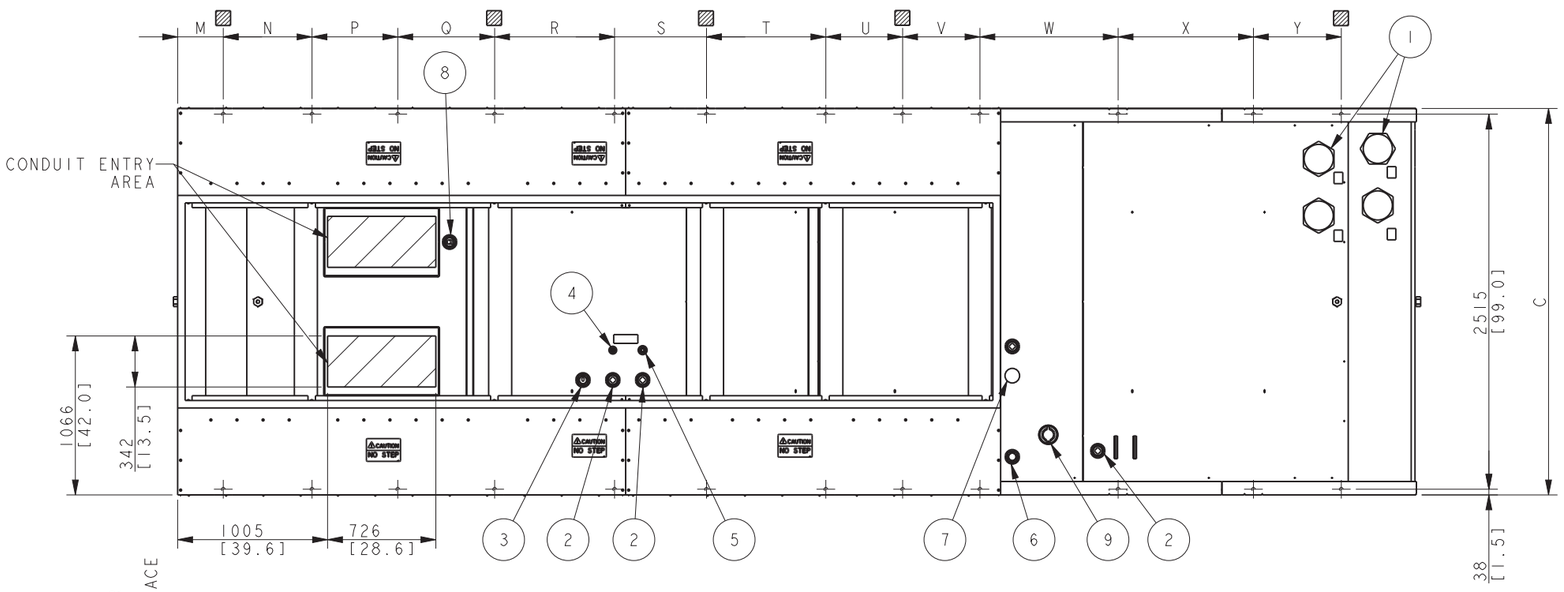

13325 [3520 GAL.] 96 HOUR STATE TANK SHOWN.

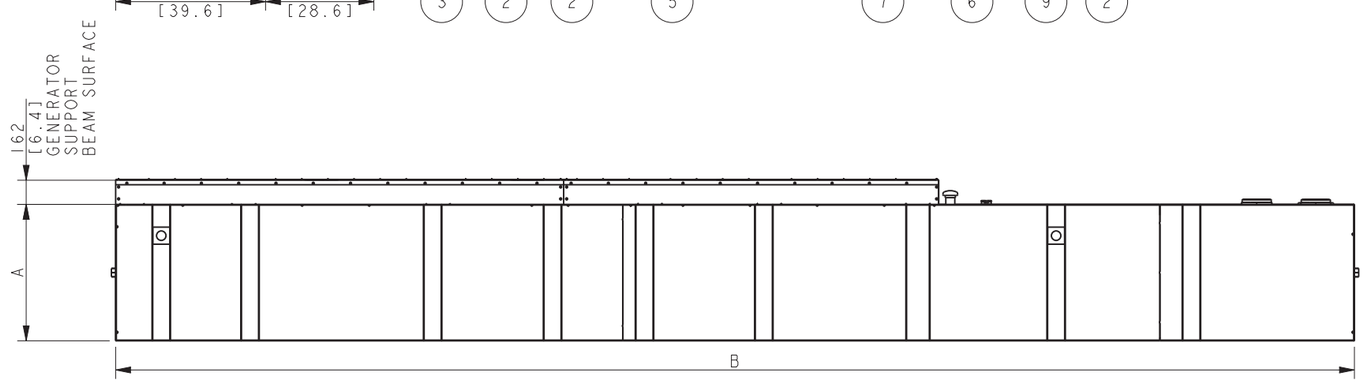

GROUND CLEARANCE I-BEAM MOUNTING HOLE

ITEM	DESCRIPTION
9	FILL CAP, 2" LOCKABLE W/PIPE RISER
8	SWITCH, FUEL IN BASIN TOP MTD, 2"
7	VENT, NORMAL
6	GAUGE, FUEL LEVEL, DIRECT READ
5	RETURN, FUEL (3/4" NPT)
4	SUPPLY, FUEL (1/2" NPT)
3	GAUGE, FUEL LEVEL, W/ SENDER
2	PLUG, PIPE (2" NPT)
1	CAP, EMERGENCY VENT

350-500KW REOZJC/D ENCLOSED
48 - 96 HOUR TANKS

REV	DATE	ON COMPOSITE DWGS, SEE PART NO. FOR REVISION LEVEL	BY
-	25NOV2019	NEW DRAWING [CT200393]	YBY

DO NOT SCALE. REFERENCE THE MODEL FOR ALL UNSPECIFIED DIMENSIONS

UNLESS OTHERWISE SPECIFIED:
ALL DIMENSIONS IN MILLIMETERS
GENERAL TOLERANCES:
X.XX ± 0.25
X.X ± 1.0
X ± 1.5
ANGLES ± 0°30'
SURFACE FINISH 125 MAX.

THIRD ANGLE PROJECTION

APPROVALS		DATE
DRAWN	YBY	25NOV2019
CHECKED	KJB	25NOV2019
APPROVED	DMS	25NOV2019

KOHLER.
KOHLER, WISCONSIN 53044

THIS DRAWING IN DESIGN AND DETAIL IS KOHLER CO. PROPERTY AND MUST NOT BE USED EXCEPT IN CONNECTION WITH KOHLER CO. WORK. ALL RIGHTS OF DESIGN OR INVENTION ARE RESERVED.

TITLE
DIMENSION PRINT, 350-500REOZJC/D ENCL & TANKS

SCALE 0.05 | CAD NO. | SHEET 7 of 7

DWG NO. **ADV-9189** | **D**